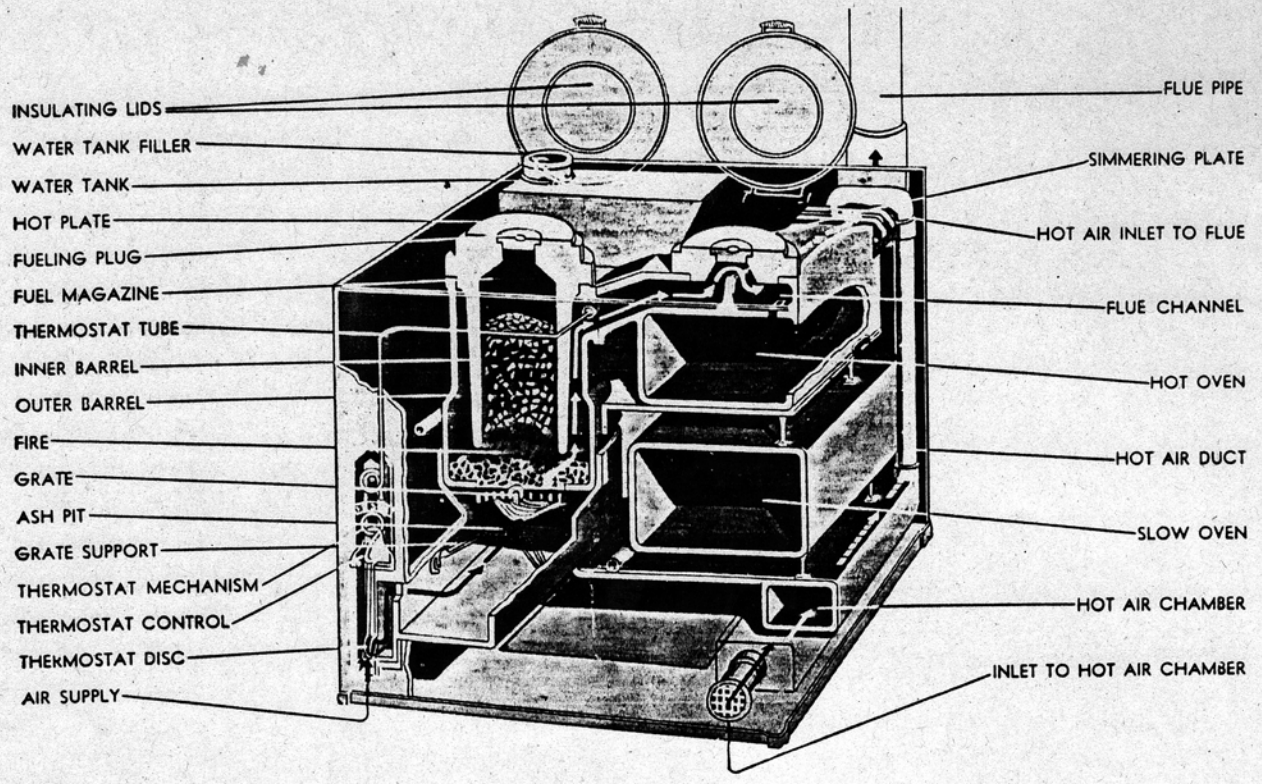

THE DESIGN AND OPERATING PRINCIPLES OF THE AGA STOVE

All essential features of the AGA stove are covered by world-wide patents

In the AGA stove an unusually small fire heats a massive barrel which is kept at a constant high temperature at all times by automatic draft control. The heat from the barrel is conducted and radiated to the various parts of the stove in the exact proportions required.

The fire burns on a revolving grate. Normal operations require that the grate be turned a few notches twice a day. The inner portion of the heavy barrel serves as the fuel magazine and the top forms the left-hand hot plate.

The gases of combustion pass between the inner barrel and the outer barrel and through a channel between the right-hand hot plate and the hot oven, heating both, finally leaving the stove at an extremely low flue temperature.

As the gases pass through the channel they affect the sensitive part of the thermostat which regulates the temperature of the stove. This thermostat operates in such a way that should the temperature of the stove become too high, less air is admitted and the rate of burning slowed down. Should the stove temperature drop the thermostat admits more air through the valve to increase the rate of combustion.

The temperature of the stove is kept constant under the different uses to which it is put not only through the action of the thermostat, but also because the stove has the ability to store and release heat as demanded.

To insure an adequate draft a supplemental flow of warm air is conducted through a bypass to the flue. This creates a constant draft up the chimney and ventilates the kitchen.

During the times when the hot plates are not being used the insulating lids are lowered to keep the heat from escaping and to permit it to be accumulated for future use. All the walls of the stove are separated from the heat-carrying inside parts by a thick mass of insulating material.

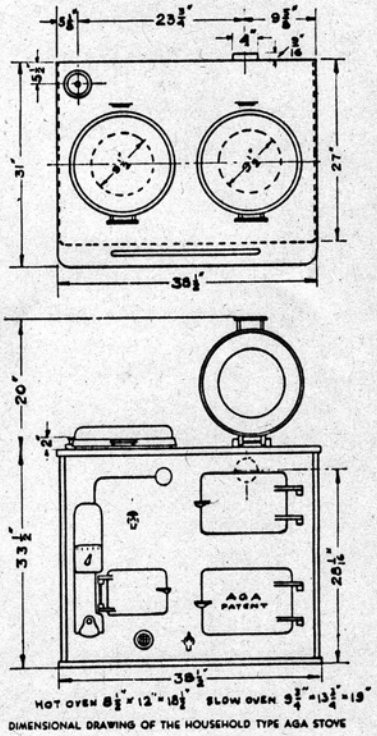

HOT OVEN 8½" × 12" × 18½" SLOW OVEN 9¾" × 13¾" × 19"

DIMENSIONAL DRAWING OF THE HOUSEHOLD TYPE AGA STOVE

AGA STOVE COMPANY

500 FIFTH AVENUE
NEW YORK

1029 NEWARK AVENUE
ELIZABETH, NEW JERSEY

US—17.39—2-36