Purchased Oct. 18, 1986 450.15
pipes + shield extra

INSTALLATION,
OPERATION AND
MAINTENANCE MANUAL
FOR

Gibraltar®

COMBINATION
COAL/WOOD-BURNING
STOVES AND
FIREPLACE INSERTS

Table of Contents

SECTION A. General Information and Safety Precautions

A-1 Introduction 3
A-2 Model Chart 3
A-3 Glossary of Terms 3
A-4 Safety Precautions 3

SECTION B. Installation

B-1 Preparation—Prefabricated Chimney 5
B-2 Preparation—Masonry Chimney 5
B-3 Installation Procedures 7
B-4 Installation of Freestanding Stoves on Floor 7
B-5 Installation of Fireplace Inserts 7

SECTION C. Operation

C-1 Break-in Procedure 9
C-2 Emergency Operation 9
C-3 Operation Using Coal 9
C-4 General 9
C-5 Starting a Fire 9
C-6 Stoking 10
C-7 Operating Shaker Grates 10
C-8 Banking 10
C-9 Removing Ash 10
C-10 Klinkers 10
C-11 Operation Using Wood 11
C-12 Starting A Fire 11
C-13 Maintaining A Fire 11
C-14 Adding Wood 11
C-15 Removing Ash 11

SECTION D. Maintenance

D-1 Introduction 11
D-2 Chimney Maintenance 11
D-3 Blower Maintenance 11
D-4 Door Maintenance 12
D-5 Firebox Maintenance 12
D-6 Exterior Maintenance 12
D-7 Brick Replacement and Grate Installation—Models CFI, CFS & MCC 12

Section A

GENERAL INFORMATION AND SAFETY PRECAUTIONS

A-1. Introduction.

This manual covers installation, operation and maintenance for the Gibraltar combination coal/wood burning stoves and fireplace insert listed in the model chart below. A glossary of terms is provided in Section A-3, and illustrations showing the various models are provided on page 4. Using the model chart and illustrations, identify your stove model so that you may recognize the information pertaining to your stove. The term *stove*, as used in this manual, is also applicable to fireplace inserts except where noted.

A-2. Model Chart.

Designation	Installation	Type	Heat Circulation	Flue Size
MCC	Freestanding	Stove	Fan	6 in.
CFS	Freestanding	Stove	Radiant	6 in.
CFI	Insert	Insert	Fans	5 1/2 x 7 1/2 Rectangle
SCC	Freestanding or Hearth	Stove	Fan	6 in.

A-3. Glossary of Terms.

a. Combustion—The chemical union of a combustible material and oxygen in the production of heat.
b. Combustible Material—Materials that *will* ignite or burn if subjected to fire or intense heat.
c. Non-Combustible Material—Materials that *will not* ignite or burn if subjected to fire or intense heat.
d. Hearth—The stone or brick floor of a fireplace.
e. Hearth Extension—A non-combustible material placed around a fireplace or stove as part of the floor of the room in which they are placed.
f. Chimney Connector—Single or multiple wall pipe used between stove flue connection and chimney.
g. Chimney—A structure through which smoke escapes from a fire.
h. Creosote—Chimney deposits originating as condensed organic vapor or condensed tar fog.
i. Carbon Monoxide (CO)—A colorless, odorless, poisonous gas formed by incomplete burning of coal or wood.
j. Carbon Dioxide (CO_2)—The non-combustible gas product resulting from complete combustion of the carbon in coal or wood.
k. Coal Ash—That portion of the mineral substances in the coal which remains after the combustible has been burned; it is the inorganic substances in the coal and has no heating value.
l. Klinkers—A fuel bed should never be poked or stirred, this brings ash in contact with incandescent, molten coke thus forming a klinker.
m. Coal Grate—The casting assembly that supports the fuel bed so that primary air may be supplied for combustion of the gases. It also provides the means of ejecting ash from the fuel bed.
n. Coal Hod—A bucket with a lip and handle for carrying coal and stoking coal through the fire box door.

A-4. Safety Precautions.

a. **Never start a fire using gasoline, charcoal lighter fluid or other combustible liquid. Kindling wood and newspaper are the recommended starting materials.**
b. Keep all combustible materials at least three feet from your stove. Such materials can become extremely hot with the potential for causing burns or fire. If an object is too hot to touch, it is too near the stove.
c. Clean the fire box of your stove regularly. When removing ashes, always place them in metal containers.
d. If your stove is connected to a masonry chimney, be sure that the mortar is sound and that the chimney has a fireclay or metal liner. (Refer to Section B-2.)
e. If the chimney connector enters a sidewall, be sure that it enters in a perpendicular or inclining position. (Refer to figure B-3
f. Burning wood leaves a residue of creosote in the chimney. Inspect and remove creosote deposits when necessary, on a regular schedule. This preventive maintenance will decrease the possibility of a chimney fire. Also, check proper seating of chimney connector to stove and chimney.
g. To avoid smoke blowback into room, open primary air control for at least one minute before opening door(s).

Figure A-1: Model MCC

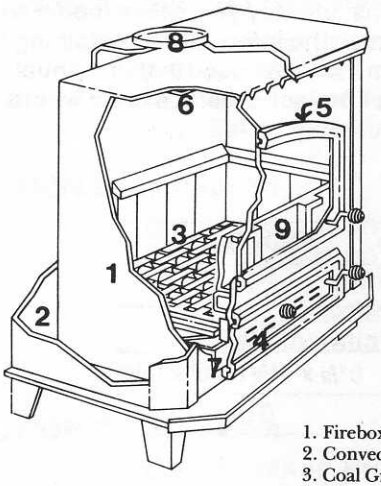

1. Firebox
2. Convection Chamber
3. Coal Grate
4. Primary & Secondary Air Ports
5. Air Wash
6. Baffle
7. Ash Pan
8. Flue 6" I.D.
9. Coal Banking Plate

Coal cap. 85 lbs.
Weight 600 lbs.

Figure A-4: Model SCC

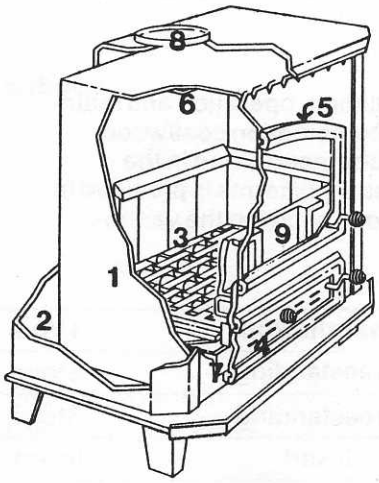

1. Firebox
2. Convection Chamber
3. Coal Grate
4. Primary & Secondary Air Ports
5. Air Wash
6. Baffle
7. Ash Pan
8. Flue 6" I.D.
9. Coal Banking Plate

Weight: 475 lbs.
Coal Capacity: 45 lbs.
Log Size: 18"

Figure A-2: Model CFS

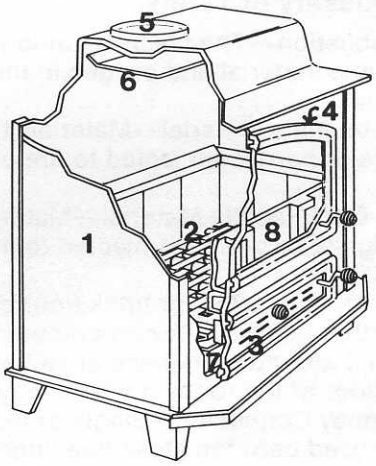

1. Firebox
2. Coal Grate
3. Primary & Secondary Air Ports
4. Air Wash
5. Flue 6" I.D.
6. Baffle
7. Ash Pan
8. Coal Banking Plate

Coal cap. 85 lbs. (nut/pea)
Weight 485 lbs.

Figure A-3: Model CFI

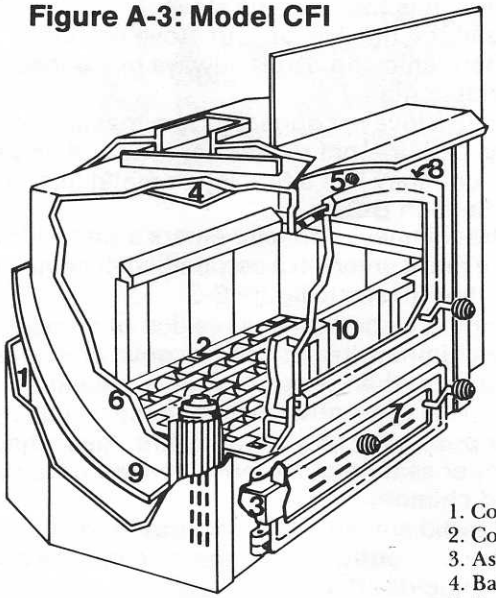

1. Convection Chamber
2. Coal Grate
3. Ash Pan
4. Baffle
5. Damper
6. Firebox
7. Primary & Secondary Air Ports
8. Air Wash
9. Air Vanes/Heat Exchg.
10. Coal Banking Plate

Coal cap. 85 lbs. (nut/pea)
Weight 650 lbs.

Section B

INSTALLATION

B-1. Preparation: Prefabricated Chimney.

Install or inspect existing prefabricated chimney system in accordance with manufacturer's instructions. Be sure chimney meets National Fire Protection Association and all local codes governing installations of this type. Chimney area must be equal to or greater than flue area of stove.

B-2. Preparation: Masonry Chimney.

A stove and chimney filled with hot light gas (smoke) will exert a pressure inside the stove that is less than that of the cooler surrounding air, creating a pressure difference called draft. Experience shows that approximately 70% of heating difficulties are traceable to draft. The causes of poor draft and the remedies are covered in the following:

a. If the cross sectional area of a chimney is too small it will be impossible to get quick pick-up or rapid burning and the result is insufficient heat. Be sure chimney area is equal to or greater than flue area of stove.

b. If the chimney is too large in cross sectional area, gases expand and cool, causing a reduction in draft. This may be corrected by installing an induced draft fan or a UL listed chimney lining system, if changes to the chimney are too costly.

c. A chimney must always clear the top of the building it serves, otherwise a downdraft condition can be experienced.

d. Chimney cleanout door must be tight or cold air will be drawn in between the cleanout door and frames. This will cool the gases and reduce available draft.

e. A chimney must be tight at all joints and free from holes, cracks or other openings. Gibraltar recommends professional repair or installation of a UL listed chimney lining system.

f. It is not recommended that a chimney serve more than one heater. *Never connect a coal or wood burning stove to the same chimney used by a gas furnace.*

g. The inside of a chimney must be free from mortar, brick or tin that may partially restrict the flue area of the chimney and thus retard the flow of gases up the stack, in turn reducing the draft. Such restrictions may generally be located by lowering a weight at the end of a rope down the flue. The descent of the weight will be interrupted by any such restriction. Another method is to use a mirror as shown in figure B-1.

h. A chimney should be of uniform cross sectional area throughout its length. To check this condition use mirror as illustrated in figure B-1.

i. A chimney connector must not project into the inside of a flue. The connector shown in figure B-2 chokes the flow of gases from the connector to the chimney and severely restricts draft. Correct installation is shown in figure B-3.

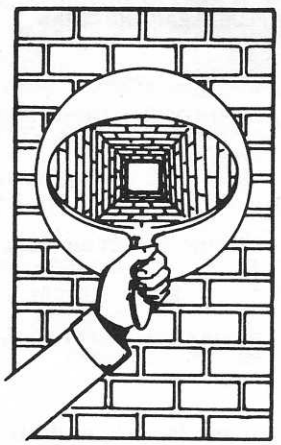

CHIMNEY INSPECTION BY MIRROR

Figure B-1

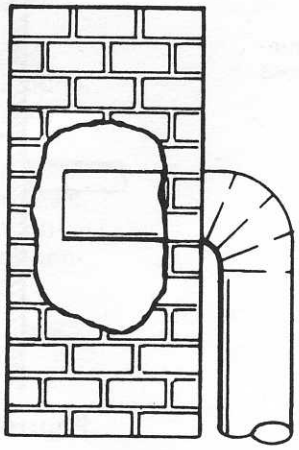

INCORRECT

Figure B-2

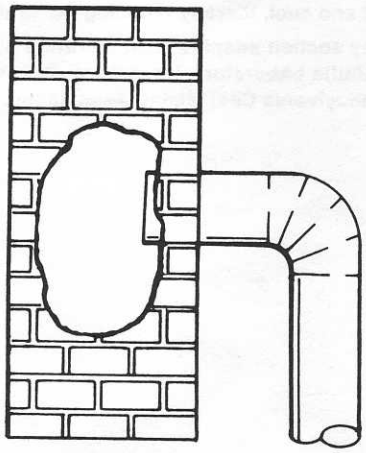

CORRECT

Figure B-3

j. Chimney connectors should be straight and as short as possible, with an upward pitch.

k. If a chimney is divided by a wall, thus making two flues instead of one, the dividing wall must go from the top to the bottom without a break or leaks. If a dividing wall does not go to the bottom and only one stove is in operation, eddy currents will be set up and the draft will be restricted.

l. A chimney cap must provide an area of escape equal to or greater than the cross-section area of the chimney.

m. Stove pipe (connecting the stove to the chimney) must be installed per dealer instructions or to local code in effect. Stove pipe should be as short as permissible, with few, if any, elbows.

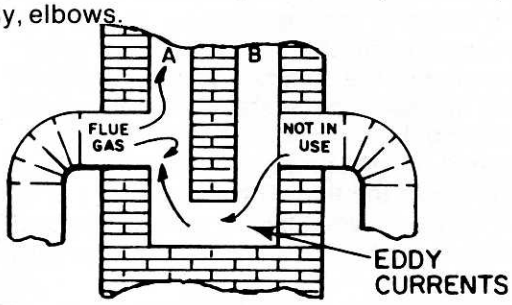

Figure B-4: Draft loss through interconnecting flues

Figure B-4 illustrates how cold air can be drawn from chimney "B" into chimney "A" thereby acting as a check draft, cooling the gases in chimney "A", thus reducing available draft. A single cleanout door at the bottom of a divided chimney generally denotes that the dividing wall has not been carried to the bottom of the flues. By using a mirror at the spot where the chimney connector enters the stack, a discontinued dividing wall can be viewed. This condition may be corrected by filling the lower part of the chimney with ashes. If the dividing wall in the chimney does not run all the way to the chimney top, the effect produced will be similar to that of a chimney that is too large, permitting hot gases to expand and cool, thereby reducing the draft.

Chimney section adapted from literature by the Anthracite Institute Laboratory, Harrisburg, Pennsylvania, and the Pennsylvania Coal Mining Association.

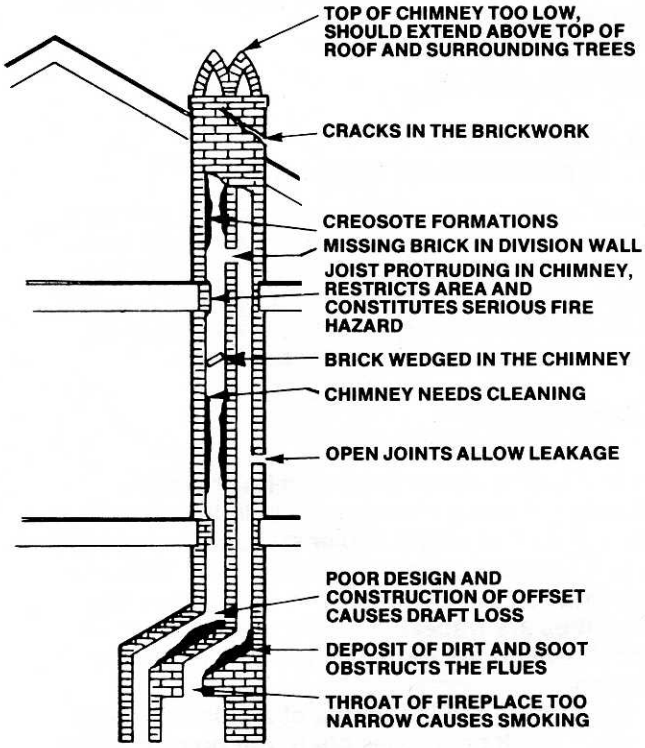

Figure B-5 : Causes of poor draft

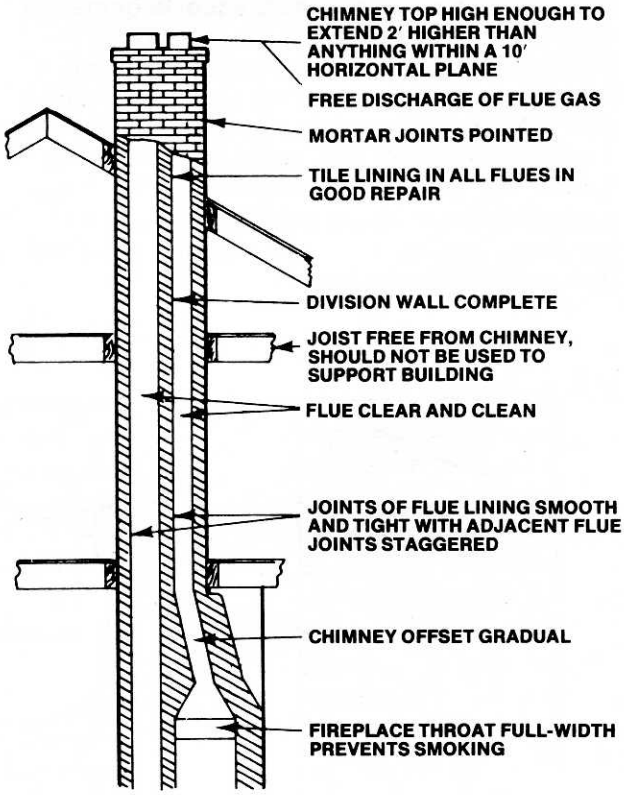

Figure B-6 : Requirements for proper draft

B-3. Installation Procedures.

WARNING

1. **Minimum distances to combustible material must be maintained to prevent damage or injury.**
2. **Gibraltar Stoves are not recommended for use in mobile homes.**

Gibraltar recommends that their stoves, as well as the type of chimney selected, be installed by experienced contractors. If installing your own stove, be sure all National Fire Protection Association and local codes which govern this type of installation are followed. The instructions provided below are intended as a guide and cannot cover every situation or guarantee conformance to all applicable codes.

B-4. Installation of Freestanding Stoves on Floor.

Models MCC, CFS, and SCC Steps listed below provide general instructions for installing stoves on a hearth extension that is equivalent to 3/8" thick asbestos.

a. See label on stove for minimum clearance to combustibles.
b. Install hearth extension on floor and mark outline of intended stove position.
c. Remeasure from outline to check minimum distances to combustible materials.
d. Removing doors, bricks, grates, coal guard and other easily detachable items will lighten stove, thus making the following steps easier.
e. Place stove on hearth extension and reinstall items removed in step d. Refer to paragraph D-7 for brick and grate installation.
f. Connect chimney. If using a prefabricated chimney, refer to manufacturer's instructions. Horizontal runs must be installed with an upward pitch.
   Chimney connector must be fastened at each joint with at least three stainless steel screws. Also a minimum of 2" air gap must be maintained around chimney and chimney connector. If using a masonry chimney refer to paragraph B-2.

B-5.Installation of Fireplace Insert.

(Model CFI.) Steps below provide general instructions for installing fireplace inserts.

WARNING

Gibraltar fireplace inserts are not approved for installation in prefabricated (zero clearance) fireplaces. Data labels for clearance to combustibles and required floor protection is attached to each stove. Contact your local dealer, building or fire officials about restrictions and installation inspection in your area.

a. Check condition of chimney in accordance with paragraph B-2.
b. Rough mark position of insert on fireplace hearth. Be sure you have the following clearances to combustible materials.
   1. From side of insert (not shield) = 12" —If not, extend brickwork.
   2. From front of insert = 18"—If not, add hearth extension.
   3. From top of insert (not shield) = 18" —If not, extend brickwork or relocate mantel.

   CAUTION: From front of stove, maintain 36" to combustibles (chairs, tables, clothing, etc.).

c. Be sure fireplace flue is at least 50 sq. in. in area (7¼" x 7¼" or 8" diameter).
d. Gibraltar recommends installation of a flue sealing kit such as that manufactured by Dura Vent Corp.* Study the instructions provided with the kit and integrate this information into the procedure as necessary.
e. Remove existing damper or lock in open position.
f. Removing doors, bricks, grates, coal guard and other easily detachable items will lighten insert, thus making placement in hearth easier.
g. Install insert into fireplace opening.
h. Install blowers per instructions in blower package.
i. (1) Remove top clamps (A) on both sides of shield.
   (2) Remove 2 bolts (B) that hold on removable leg.
   (3) Set shield (less leg) on insert and put into position (flush with fireplace front). Check appearance of installation and make final adjustment of insert and shield. On most installations, the shield will be flush with blower covers.
   (4) Mark top of insert with chalk (or other easily erasable material).

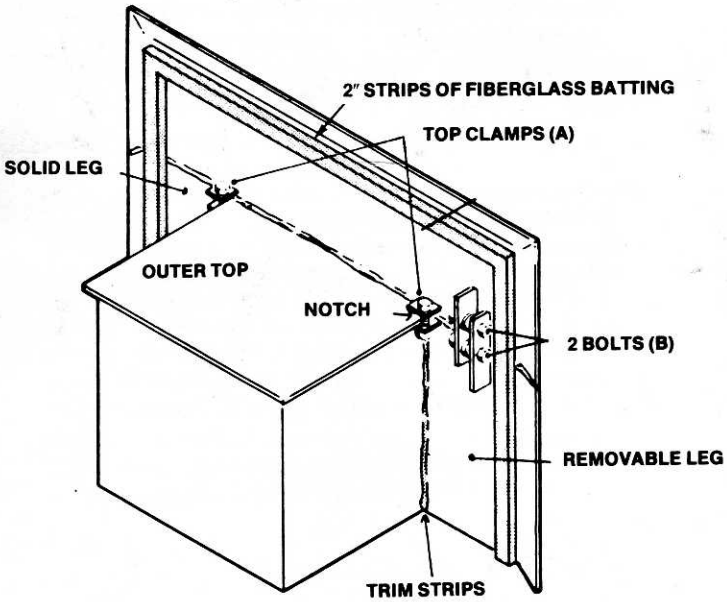

Figure B-7 **Shield Installation**

   (5) Pull insert back out onto hearth far enough to enable final installation of shield.
   (6) Pull shield tight to the right.
   (7) Replace removable leg and replace bolts. (If shield edges are not even, bolts will not line up. Trim strips on inside of legs can be forced in or out to align legs to insert.)
   (8) Position shield on chalk line and tighten all bolts and clamps.
   (9) Install shield trim per instructions in trimbox.

j. Using acrylic caulk or RTV silicone, glue strips of fiberglass batting around rear perimeter of shield. If fireplace surface is of rough brick or stone, add additional strips of fiberglass batting to ensure good seal.
k. Slide insert and shield assembly into fireplace until aligned with marks made in step h. Be sure fiberglass batting is tight against front of fireplace.
l. Reinstall items removed in step f. Refer to paragraph D-7 for brick and grate installation. WARNING: Be sure the flue opening of the insert is directly in line with the chimney opening and clears the lintel.

Section C

OPERATION

C-1. Break-In Procedure.

New stoves need a break-in period. For the first eight hours, burn a low fire in the stove. At first the finish on the stove will cause some smoking, but this will only last a short time. Repeat this procedure each time the stove is repainted.

C-2. Emergency Operation.

(Models MCC & CFI.) These are designed to operate with blower(s) running, if so equipped. In the event of prolonged power failure or blower malfunction remove blower(s) to allow more natural convection to occur. Refer to paragraph D-3.

C-3. OPERATION USING COAL.

WARNING

Read all of the operating instructions provided in paragraphs C-4 to C-10 before attempting to use your stove. Personal injury, damage to the stove and/or surrounding areas can result from improper use.

C-4. General Information

Always be sure you are using the right coal. Gibraltar recommends anthracite and bituminous coal. Cannel coal is not intended for use in stoves because it contains substantial amounts of volatile materials which may cause explosions.

Coal is generally available in three sizes: pea, nut (chestnut) and stove. The preferred size is nut. Stove size coal is too large for home stoves.

Before operating a stove using coal, the burning and combustion process must be understood. All coal contains some amount of volatile gases which can gather above the coal bed, leading to a potentially explosive situation. Most coal stoves utilize a separate secondary air control to prevent this. In the new Gibraltar combustion air control system, need for a secondary air control has been modified, as explained below, thereby simplifying operation.

A coal bed consists of three combustion zones. The lower zone (that closest to the grates) is the oxidation zone. In this zone, carbon from the coal and oxygen from the primary air draft combine to form carbon dioxide. In the middle, or reduction zone, carbon from the coal combines with the remaining oxygen to form carbon dioxide but sufficient oxygen is not available. Therefore, carbon monoxide is formed. In the upper or distillation zone, CO perculates up from the reduction zone while tars and hydrocarbons are being distilled from the raw coal. These substances and CO gas are combustible and at ignition temperature. In the Gibraltar draft system, a portion of the primary air is diverted through an opening in front of the coal grate to supply pre-regulated and pre-warmed secondary air. This air travels up between the coal banking plate and the door. This fresh supply of air provides oxygen for combustion of the tars, hydrocarbons and CO gas which are rendered into addition heat, harmless CO_2, nitrogen and water vapor.

Because of the presence of these volatile gases and the need for proper flow of air through the coal bed, precise operating instructions are provided in the paragraphs below. Read and follow these instructions to ensure safe and efficient use of your stove.

C-5. Starting a Fire.

To start a fire proceed as outlined below:

a. Install banking plate as seen in Fig. A-1 thru A-4. NOTE: Banking plate *MUST* be in position when lighting and maintaining a coal fire. (Optional for Wood Burning Only).
b. On CFI Model open (pull out) damper.
c. Move the primary air control pin to the full open position.
d. Refer to paragraph C-12 and start a fire using preferably newspaper and wood kindling. Allow this fire to burn until a bed of wood coals is established.
e. Spread two or three shovels full of coal over the wood coals. Leave the ash pit door open slightly until coal fire is established. Do not leave stove unattended with bottom door open.
f. After the fire has spread throughout the bed, add twenty-five to thirty pounds of coal and close bottom door.

   A convenient method for measuring coal is to use a coal hod, or scuttle. A coal hod will hold approximately twenty-five pounds of coal.
g. Allow fire to burn until small blue flames lick up between coals. Up to this point, patience is required. You must wait until the blue flames appear before adjusting primary air control.
h. For best combustion efficiency, fill unit with coal to just below cast iron brick retainers.

   Adjust primary air control to establish rate of burn. Use care in this adjustment, too little air will cause fire to burn sluggishly, too much air will result in too hot a fire, thus wasting fuel.

C-6. Stoking (Adding Coal).

WARNING

Open primary air and damper for one minute before opening door(s). This will prevent blowback caused by the quick ignition of smoke and ash.

When the fire is stoked a red "hot spot" should be maintained in the fire box. These red coals will ignite and burn off the volatile gases released by the fresh coal before they can accumulate. New coal may crackle and pop when spread over the coal bed. Because of the gases released and the need to quickly ignite them, coal must never be added atop a bed which has been allowed to cool.

If the bed has become cold, re-kindle the fire using newspaper and wood kindling before stoking. (Refer to paragraph C-5.) **Never use any flammable liquid to restart a fire.** To stoke a fire, do the following:

a. Open primary air control and damper for one minute before opening door(s).
b. Open fire box door(s) and add coal as desired by evenly spreading it over the bed. An open spot of glowing coals must be left uncovered by new coals. This spot should be approximately four inches in diameter and at the center or front of the fire box. The limiting factor on how much coal to add is that the bed should not be built above the bottom edge of the fire brick retainer.
c. Gently shake the grates until a few live coals drop into the ash pan before closing ash pan door. Allow fire to re-establish before fully closing the ash pan door and readjusting primary air control and damper

C-7. Operating Shaker Grates.

The shaker handle is supplied loose. To operate the shaker mechanism on Models CFI, CFS, SCC or MCC, the handle is placed onto the square peg which is located inside the ash pan door. The grates should be shaken whenever the fire is stoked or when ash build up begins to cut off the supply of primary air up through the bed. Use care when operating the shaker mechanism, rough use—such as attempting to dislodge a piece of coal from between grates—can damage the mechanism or break a grate. Also, excessive shaking can cause formation of klinkers or cause the fire to go out. To shake down the ash build up, do the following:

a. Open the primary air control for one minute before opening the ash pan door. Open ash pan door and install shaker handle. Shake down ashes until a few live coals drop into the ash pan.
b. Leave the primary air control open until the fire revives, after shaking down, and then readjust to maintain desired rate of burn.

C-8. Banking.

Banking of a fire is a procedure not required when using a Gibraltar coal stove. Load coal evenly in fire box just below brick retainer.

C-9. Removing ash.

A coal fire receives its oxygen from the bottom. Also coal produces an abundance of ash. If ash build up is not removed from the ash pan it begins to restrict flow of oxygen to the bed. This not only leads to the possibility of gas build up in the top of the fire box, but it also causes overheating and damage to the grates. To remove ash build up do the following:

a. Turn blowers OFF, if equipped, to prevent hot embers from being blown onto combustible materials.
b. Open the primary draft control for one minute before opening the ash pan door.
c. Carefully remove the ash pan. Use protective gloves and be sure hot ashes are not spilled from the pan onto combustible surfaces. Empty the ash into a metal container that can be sealed with a tight fitting lid. Place the metal container on a non-combustible floor and in a safe location. Be sure ash is fully cooled before disposal.
d. Before re-installing ash pan, clean out any ash which has spilled onto bottom of stove. Re-install ash pan and readjust primary air and damper.

C-10. Klinkers.

Coal ash contains iron and other metal deposits which, if allowed to gather towards the top of the fire bed, will combine with ash to form hard chunks called klinkers. Some klinkers will shake down with ash but some will remain to fuse with others to form larger chunks. As klinkers build up the fire will begin to act sluggish, or the fire will burn out, due to blockage of primary air. At this time, the fire must be allowed to cool and the klinkers removed with tongs or protective gloves. Then the fire can be rebuilt.

Never poke or stir a coal bed as this will bring ash to the top where klinkers are formed.

C-11. OPERATION USING WOOD.

C-12. Starting a Fire.

Seasoned hardwood is recommended since it will provide the most efficient burning, causes less smoking of glass door inserts (if installed) and creates the least amount of creosote deposits in your chimney.

a. Open primary air control.
b. Place paper and small kindling on grates. Light paper. Add larger pieces of kindling as the fire catches. *DO NOT* use any combustible liquid to start fire.
c. After the kindling is burning briskly, add small logs, close door(s) and start blower(s)—if equipped—on low speed. Increase blower speed as required after fire is burning satisfactorily, and as additional heating is desired.
   Note: Coal banking plate not required when burning wood only.

C-13. Maintaining a Fire.

Adjust primary air control to maintain correct rate of burning. Too little primary air causes the fire to burn sluggishly and increases creosote deposits. Too much primary air causes the fire to burn too rapidly, wasting wood and releasing heat in greater amounts than needed.

C-14. Adding Wood.

Open primary air control for one minute before opening door(s). After one minute, open door(s) and add logs to fire as desired. Do not build fire above firebrick lining. Be sure logs are placed so as not to strike glass door inserts when door is closed.

C-15. Removing Ash.

Turn off blower(s)—if equipped—to prevent hot embers from being blown onto combustible materials. Remove ashes as described in paragraph C-9

Section D

MAINTENANCE

WARNING

1. **Disconnect all electrical power before attempting maintenance.**
2. **Be sure fire is completely burned out and stove has cooled to room temperature before attempting maintenance.**

D-1. Introduction.

The following paragraphs are intended to assist you in keeping your stove attractive and safe. Perform this maintenance at least at the beginning and end of each heating season and more often if necessary.

D-2. Chimney Maintenance.

Chimney maintenance is important no matter which fuel is used in the stove. Coal leaves an ash residue in the chimney and wood leaves creosote. Both of these deposits are combustible and therefore a cause of chimney fires. Use of anthracite coal or hardwood fuels will necessitate cleaning the chimney twice each season. Use of bituminous coal or soft wood will necessitate cleaning the chimney every six weeks. Gibraltar recommends professional chimney cleaning. If you are to clean your own chimney the following precautions are recommended:

a. Inserts and stoves installed on fireplace hearths should be pulled out and the fireplace interior cleaned of soot and ash buildup.
b. Be sure chimney connector and seal of shield to fireplace is in good condition. If a flue sealing kit was used in initial installation, re-seal to fireplace after chimney is cleaned. Replace any broken or worn parts.
c. If coal was burned, the possibility of creating sparks in cleaning must be avoided. Dislodged coal dust can ignite and explode if metal tools are used in the sweeping process. Polypropyline nylon or hassine brushes should be used. Wooden or fiberglass chimney rods with brass fittings are also recommended.
d. After the final burning for the season, the flue should be washed with a mixture of vinegar and water to help preserve the flue liner.

D-3. Blower Maintenance.

(Models MCC, SCC or CFI) Unplug blower(s) and remove by unfastening mounting screws. Use care when removing blower that blower wheel or bearings are not damaged. Inspect blower; in the event of damage or excessive wear, return blower to Gibraltar address Mark package "ATTENTION BLOWER REPAIR DEPARTMENT." Repairs will be made in accordance with the blower warranty.

If blower is in good condition, carefully vacuum any accumulated dirt from blower and blower compartment.

D-4. Door Maintenance.

Check seals around doors. If missing or frayed, replace, using Gibraltar Rope Kit, available at your local dealer.

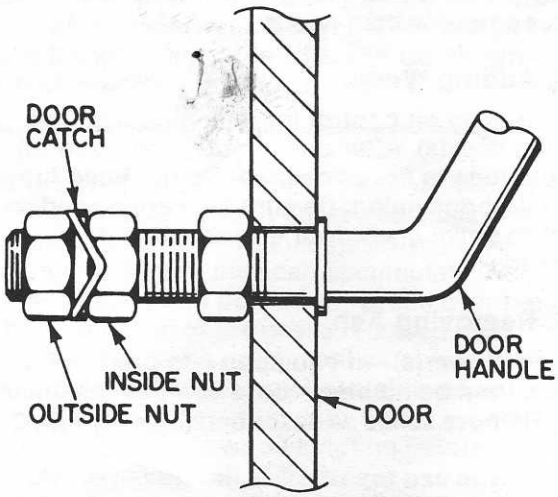

Figure D-1

If door does not close tight against rope seal, readjust door catch (Refer to figure D-1) by loosening outside nut while holding inside nut in position with proper wrench. Turn inside nut one turn towards door. Hold inside nut and catch in proper position and tighten outside nut. Check operation of door; if still loose, repeat above procedure until tight.

Check seals around inserts and check for cracks. If seals are broken or if glass is cracked, remove glass insert by unfastening screws located around glass insert on inside of door. Replacement inserts are available from your Gibraltar dealer. Reinstallation instructions are included with new glass insert.

To clean glass, use a special glass cleaner available at your dealer. A brush-on type cleaner is recommended. If a spray-type cleaner is used, do not spray painted areas. Use of cleaners such as steel wool or abrasive cleaners is not recommended in that they may scratch glass surface leading to cloudiness or cracks.

D-5. Fire Box Maintenance.

Remove ash, bricks and baffle plate. Clean fire box, bricks and baffle plate using a bristle wire brush. Sand and repaint, if desired, as suggesed in paragraph D-6 below.

D-6. Exterior Maintenance.

Clean exterior surfaces of stove using an all-purpose type spray cleaner. Sand any areas showing corrosion and, after preparing surface in accordance with paint manufacturer's instructions, repaint using a high temperature paint, if desired.

D-7. Brick Replacement and Grate Installation.

(Models CFI, CFS & MCC.) To install brick and grates, refer to figure D-2 and do the following:

(Model SCC—similar but smaller set, parts #0230 thru 0233.)

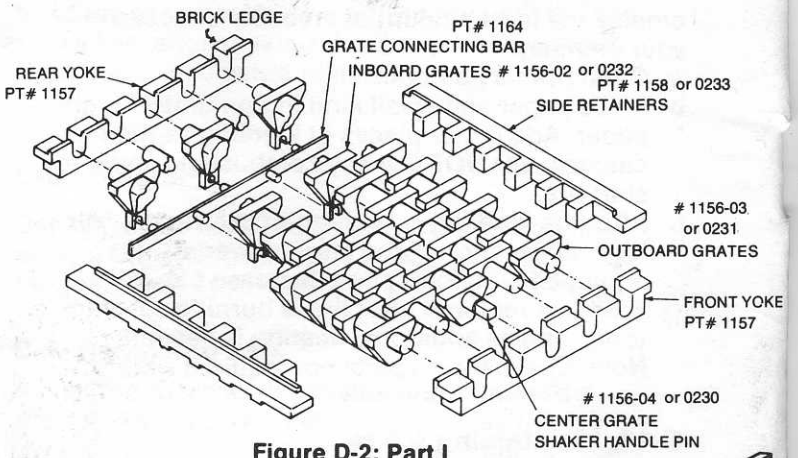

Figure D-2: Part I

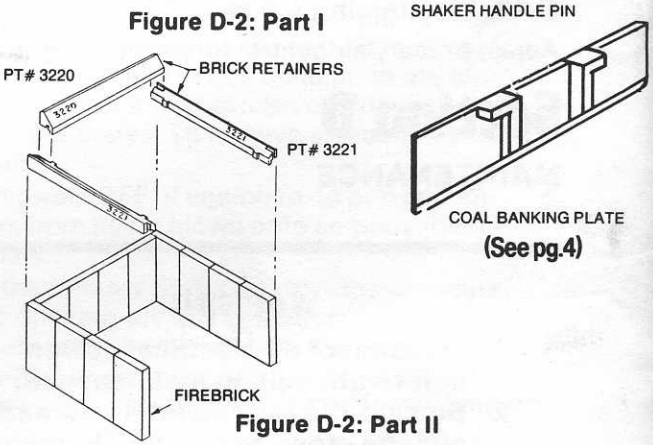

(See pg.4)

Figure D-2: Part II

(For CFI, CFS, MCC)

a. Place SIDE RETAINERS on support angles in corners of stove.
b. Place REAR YOKE in stove with BRICK LEDGE adjacent to rear wall. Fit ends of yoke on ends of sides retainers and pull forward to provide room for FIREBRICK.
c. Place FRONT YOKE in stove in same manner as rear yoke but BRICK RETAINER must be placed adjacent to front stove wall.
d. Install CENTER GRATE into stove by lifting back end up towards rear corner so as to allow SHAKER HANDLE PIN to slip into hole in front of stove.
e. Fit GRATE CONNECTING BAR under CENTER GRATE. Fit single pin into engagement hole in rear rib of CENTER GRATE.
f. Install OUTBOARD GRATES into slots of FRONT and REAR YOKES. These grates have 7 ribs. Be sure SHAKER BAR PINS are fitted into engagement holes. Gently test mechanism.
g. Install INBOARD GRATES in same manner. These grates have 6 ribs.
h. Install FIREBRICK on BRICK LEDGES as shown and install BRICK RETAINER on top of bricks.

Clearance to Combustibles

MODEL: CFS

CHIMNEY TYPE: MINIMUM 6 INCH DIAMETER APPROVED LOW HEAT RESIDENTIAL TYPE ALL FUEL.—CHIMNEY CONNECTOR: 6 INCH DIAMETER MINIMUM 24 GAUGE BLUE OR BLACK STEEL. INSTALL AT LEAST • INCHES FROM WALL AND 18 INCHES FROM CEILING. SPECIAL METHODS ARE REQUIRED WHEN PASSING THROUGH A WALL OR CEILING: SEE INSTRUCTIONS AND BUILDING CODES.

• SEE DIAGRAMS

FREESTANDING MODE

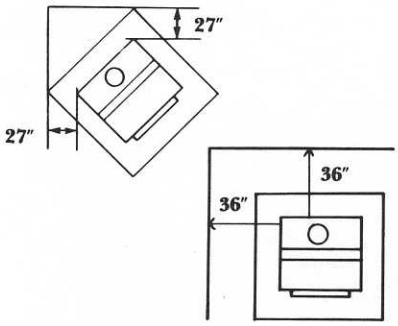

FLOOR PROTECTOR MINIMUM SIZE

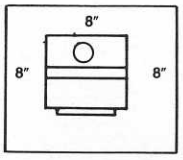

3/8" ASBESTOS MILLBOARD OR EQUIVALENT

MODEL: MCC

CHIMNEY TYPE: MINIMUM 8 INCH DIAMETER APPROVED LOW HEAT RESIDENTIAL TYPE ALL FUEL.—CHIMNEY CONNECTOR: 6" INCH DIAMETER MINIMUM 24 GAUGE BLUE OR BLACK STEEL. INSTALL AT LEAST 22 INCHES FROM WALL AND 18 INCHES FROM CEILING. SPECIAL METHODS ARE REQUIRED WHEN PASSING THROUGH A WALL OR CEILING: SEE INSTRUCTIONS AND BUILDING CODES.

FREESTANDING MODE

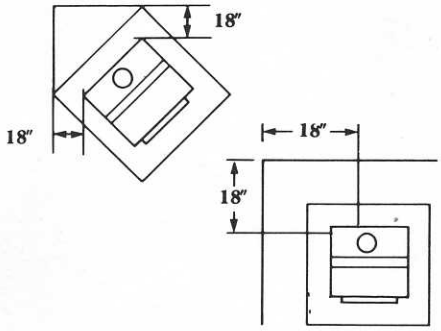

FLOOR PROTECTOR MINIMUM SIZE

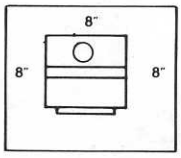

3/8" ASBESTOS MILLBOARD OR EQUIVALENT

MODEL: CFI

TO BE INSTALLED IN A MASONRY FIREPLACE BUILT IN ACCORDANCE TO THE UNIFORM BUILDING CODE ON A MASONRY HEARTH EXTENDING 20 INCHES FROM THE FRONT OPENING OF THE FIREPLACE.

A) SIDE WALL 12 INCHES
B) MANTEL 18 INCHES
C) DECORATIVE SIDE TRIM 9 INCHES

MODEL: SCC

CHIMNEY TYPE: MINIMUM 6 INCH DIAMETER APPROVED LOW HEAT RESIDENTIAL TYPE ALL FUEL. —CHIMNEY CONNECTOR: 6 INCH DIAMETER 24 GAUGE BLUE OR BLACK STEEL. INSTALL AT LEAST 24 INCHES FROM WALL AND 18 INCHES FROM CEILING. SPECIAL METHODS ARE REQUIRED WHEN PASSING THROUGH A WALL OR CEILING. SEE INSTRUCTIONS AND BUILDING CODES.

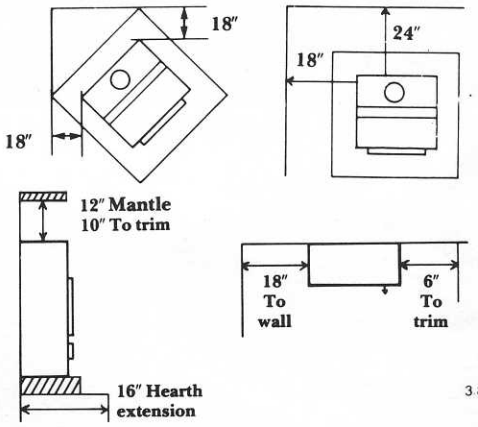

FLOOR PROTECTOR MINIMUM SIZE

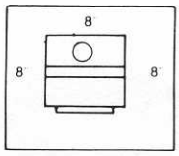

3.8" ASBESTOS MILLBOARD OR EQUIVALENT

GIBRALTAR® WARRANTY CARD

PLEASE RETURN WITHIN 10 DAYS FROM DATE OF PURCHASE

NAME _____ MODEL _____

ADDRESS _____ SERIAL # _____

_____

_____

DATE OF PURCHASE RETAIL DEALER

_____ _____

ADDRESS _____

_____

WARRANTY

J.A.B. Heating Co., Ltd. maintaining an office at 2000 Erie Blvd. E., Syracuse, New York ("Manufacturer"), makes the following **Fifteen Year Limited Warranty** to each original retail purchaser of its Gibraltar Stove, as follows:

1. The Gibraltar Stove and those parts manufactured by Manufacturer will be free from defects in material and workmanship for a period of **fifteen** years from the date of purchase by the original retail purchaser from the retailer, provided that the Gibraltar Stove is installed and operated in accordance with the printed instructions furnished with the stove by Manufacturer.

2. This Limited Warranty does not apply to and specifically excludes:

(a) Paint, Glass and Baffle
(b) Coal grate or Wood grate—Limited 3 yr. warranty.
(c) Firebrick or brick retainer
(d) Damper assembly—Limited 1 yr. warranty.
(e) Fiberglass rope gasket.
(f) Damage caused by or resulting from accident, improper handling or operation, abuse or misuse.
(g) Improper installation (including, without limitation, failure to conform said installation to applicable building, fire and other safety codes.)
(h) Unauthorized modification or repairs made or attempted.

3. Manufacturer's duty in the event an alleged defect occurs within the warranty period is as follows: The original retail purchaser should contact the retailer from whom he purchased the stove (or Manufacturer, if the retail dealer cannot be reached) and arrangements made for the stove to be inspected. If inspection indicates that the failure was due to defective material or workmanship and that the other terms and conditions of this Limited Warranty have been complied with, Manufacturer's sole duty and liability under this Limited Warranty shall be limited to Manufacturer's selection of one of the following options: (a) refunding the original purchase paid by the original retail purchaser for the Gibraltar Stove; or (b) replacing or repairing the defective stove and/or part. The original retail purchaser shall be required to pay for mileage and/or shipping charges and/or transportation of the allegedly defective stove for inspection and/or repair. Labor and/or service charges are not covered under this Limited Warranty.

4. INCIDENTAL OR CONSEQUENTIAL DAMAGES FOR BREACH OF ANY AND ALL EXPRESS OR IMPLIED WARRANTIES ARE EXCLUDED HEREBY (SOME STATES DO NOT ALLOW THE EXCLUSION OR LIMITATION OF INCIDENTAL OR CONSEQUENTIAL DAMAGES SO THE ABOVE LIMITATION OR EXCLUSION MAY NOT APPLY TO YOU). ANY IMPLIED WARRANTY SHALL BE LIMITED TO ONE YEAR PERIOD FROM THE DATE OF PURCHASE BY THE ORIGINAL RETAIL PURCHASER (SOME STATES DO NOT ALLOW LIMITATIONS ON HOW LONG ANY IMPLIED WARRANTY LASTS SO THE ABOVE LIMITATION MAY NOT APPLY TO YOU). IN NO EVENT* WHETHER A CLAIM IS MADE AGAINST MANUFACTURER BASED ON BREACH OF THIS WARRANTY OR ANY OTHER TYPE OF WARRANTY, INCLUDING, WITHOUT LIMITATION, THOSE IMPLIED BY LAW SHALL MANUFACTURER BE LIABLE FOR ANY SPECIAL, INDIRECT, CONSEQUENTIAL OR OTHER DAMAGES OF ANY NATURE WHATSOEVER IN EXCESS OF THE PURCHASE PRICE OF THE GIBRALTAR STOVE ACQUIRED BY THE ORIGINAL RETAIL PURCHASER. ALL WARRANTIES BY MANUFACTURER ARE SET FORTH HEREIN AND NO CLAIM SHALL BE MADE AGAINST MANUFACTURER BASED ON ANY ORAL WARRANTY OR REPRESENTATION.

This Warranty gives you specific legal rights (conditioned upon your fulfilling the requirements herein set forth) and you may also have other rights which vary from state to state.

No agent, distributor, salesman, wholesale or retail dealer has authority to bind Manufacturer to any other affirmation, representation or warranty concerning the Gibraltar Stove.

If, for any reason, your retail dealer is unable to handle the warranty service or replacement, write to Manufacturer as follows:

J.A.B. Heating
2000 Erie Blvd. E.
Syracuse, N.Y. 13224

and include in your letter the following information:

(a) Model Number.
(b) Description of operating problem and part that appears defective.
(c) Name and address of dealer from whom the stove was purchased.
(d) Date stove was purchased.

Do not return an allegedly defective part or stove without prior written authorization from Manufacturer.

THIS WARRANT DOES NOT INCLUDE BLOWER (SEE BLOWER WARRANTY).

THIS WARRANTY DOES NOT INCLUDE BLOWER (SEE BLOWER WARRANTY).

Manufactured by

J.A.B. HEATING
2000 ERIE BLVD. E.
SYRACUSE, N.Y. 13224

FIRST CLASS
Permit No. 5223
Syracuse
New York

BUSINESS REPLY MAIL
No Postage Stamp Necessary if mailed in the United States

Postage will be paid by:

GIBRALTAR ENERGY PRODUCTS
c/o JAB HEATING CO., LTD.
2000 ERIE BLVD. EAST
SYRACUSE, N.Y. 13224