GENERAL (Continued)

(b) Water kept on top of heater to provide moisture will often spill over on top of the heater and cause it to rust and damage the appearance. Avoid filling too full any vessel used for this purpose.

(c) Your space heater is a "machine". All machines are subject to **mechanical failure**: switches go bad, motors "burn up" and various other things happen, but under ordinary operating conditions with reasonable care, your heater should give you **years** of good service.

Read your warranty. Be sure you understand it. If you did not receive a warranty card with your heater, ask your dealer for one.
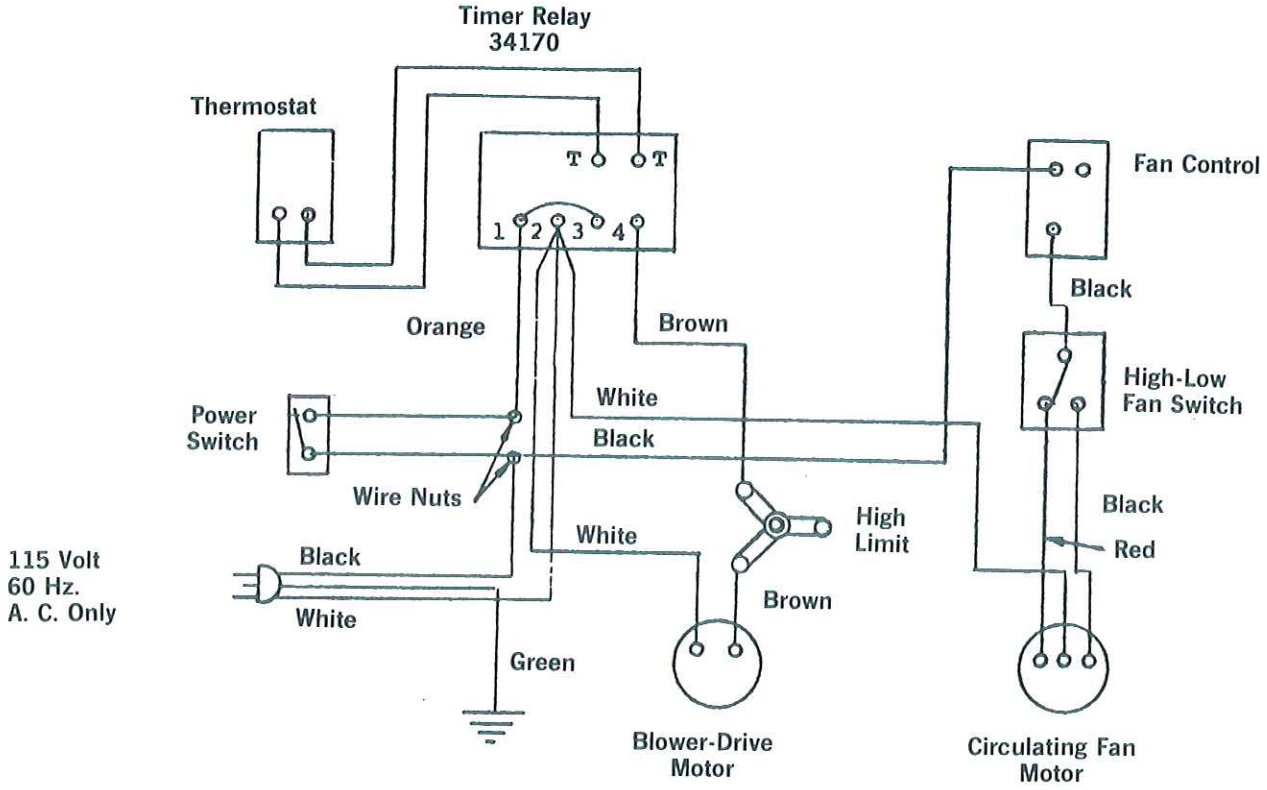
WIRING DIAGRAM
MODEL 77 SPACE HEATER